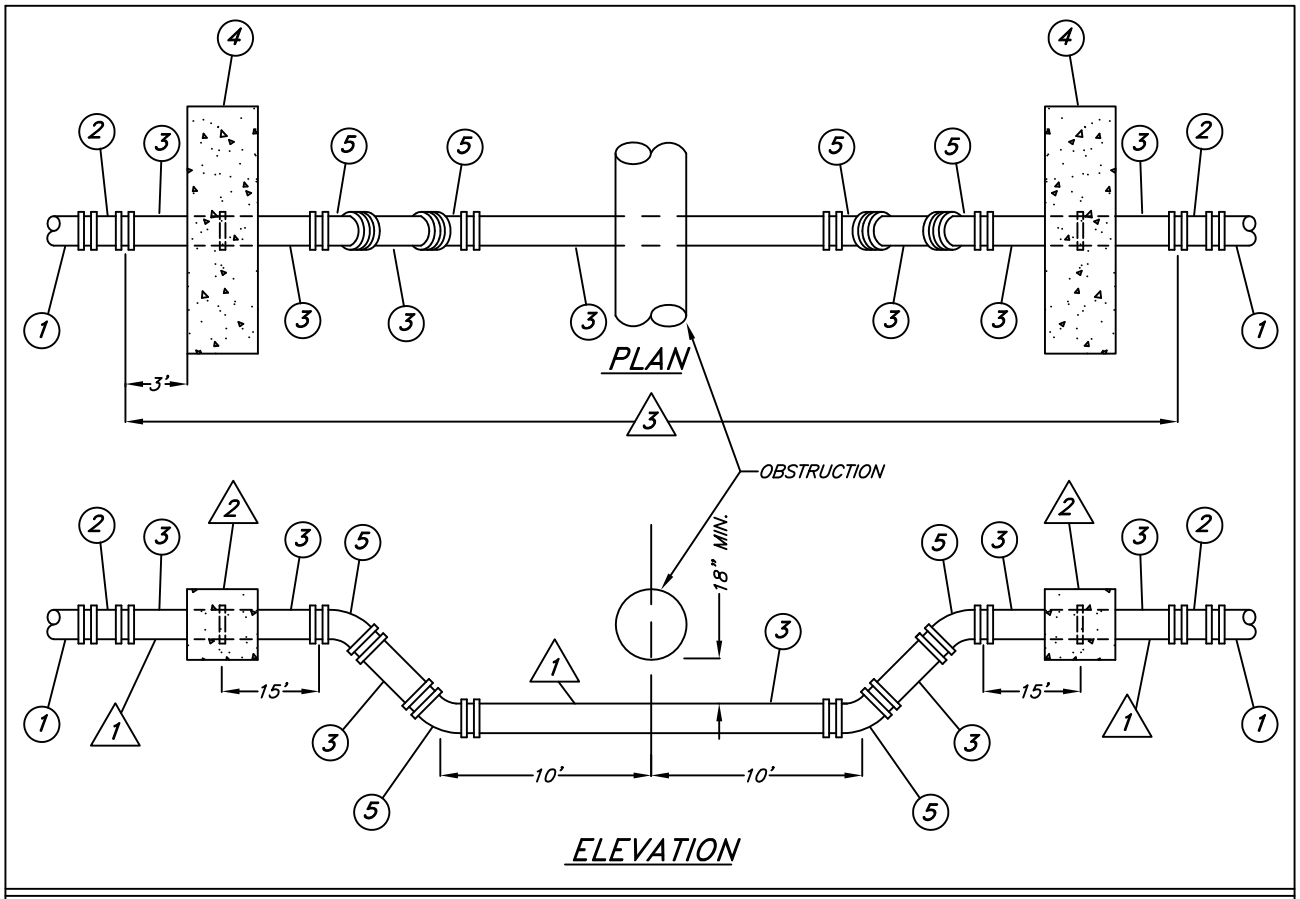

MATERIAL LIST

	QTY	DESCRIPTION	STOCK NO.		QTY	DESCRIPTION	STOCK NO.
1	AS REQ.	PVC PIPE OR DI PIPE					
2	2	MJ SOLID SLEEVE					
3	AS REQ.	DI PIPE					
4	2	CONCRETE THRUST COLLAR W/RETAINER GLANDS					
5	4	MAIN SIZE X 45° MJ BENDS W/RETAINER GLANDS.					

GENERAL NOTES

1. FULL 18' SECTION OF DI PIPE.
2. SEE STANDARD WS-401, WS-402, WS-403 FOR THRUST COLLAR DETAILS.
3. THIS METHOD OF INSTALLATION IS ALSO AN ACCEPTABLE STANDARD WHEN USING BENDS LESS THAN 45 DEGREES.

CONSTRUCTION STANDARD
CITY UTILITIES
OF SPRINGFIELD, MISSOURI

TYPICAL DOUBLE OFFSET
WITH BENDS
NEW CONSTRUCTION

LATEST REV. DATE	STANDARD NO.	PAGE:
03-26-98	WS-114	