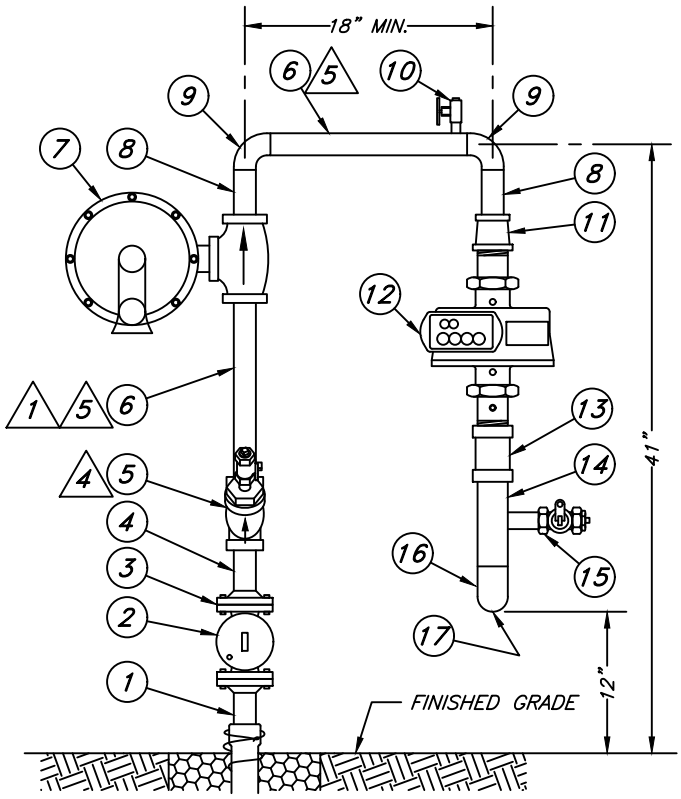

FRONT VIEW △2

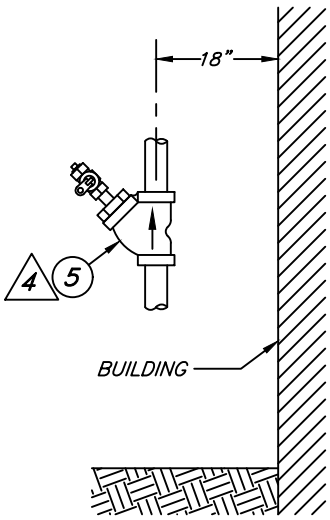

SIDE VIEW

MATERIAL LIST

◯	QTY	DESCRIPTION	STOCK NO.	◯	QTY	DESCRIPTION	STOCK NO.
1	1	1-1/4" EXISTING FLANGED ANODELESS RISER		9	2	1 1/4" 90° WELD ELL	205040
2	1	1-1/4" EXISTING FLANGED PLUG VALVE		10		1/4" GAUGE TAP (SEE GS-510)	
3	1	1-1/4" FLANGE INSULATION KIT (SEE GS-420)	204215	11	1	1-1/2"x1-1/4" BLACK REDUCER	206500
4	1	1-1/4" STUB END	204101	12	1	1-1/2" INLET METER SWIVEL - INSULATED	
	1	1-1/4" LAP JOINT FLANGE (SEE GS-500)	204100		1	5C-TI OR 8C-TI THREADED ROTARY METER	
5	1	1 1/4" Y STRAINER, 100 MESH, SOCKET WLD	206507		1	1-1/2" OUTLET METER SWIVEL - 1/4" TAP	
	1	3/4"x2" BLACK NIPPLE	206388	13	1	1-1/2" THREADED COUPLING	206145
	1	3/4" HP METER STOP	204065				
	1	3/4" BLACK PLUG	206462	14	1	1-1/2"x6" THREADED NIPPLE	206426
6		1 1/4" BLACK STEEL PIPE	201005	15	1	1" BYPASS VALVE TAP (SEE GS-514) NEEDED FOR BLOWDOWN	
7	1	1-1/4"x1-1/4" TH'D SENSUS 143-80-2 REGULATOR WITH 3/8" ORIFICE. REFER TO GS-308 FOR CAPACITY. SEE NOTE 3	212101	16	1	1-1/2" 90° WELD ELL	02500077
8	2	1-1/4"x4" THREAD x PLAIN END NIPPLE	206448	17		**1-1/2" CUSTOMER PIPING STUBBED OUT 24" BEYOND THE BUILDING WALL AND 12" ABOVE GRADE**	

△ GENERAL NOTES

1. THREAD ONE END OF THE PIPE.
2. INSTALLATION OF METER SET MAY BE MIRRORED RIGHT TO LEFT. ROTATE THE METER AS REQUIRED.
3. ORIFICE SIZE MAY BE SMALLER BUT NOT LARGER THAN STATED TO MATCH ACTUAL LOAD CONDITIONS.
4. INSTALL STRAINER DISCHARGE AWAY FROM THE WALL OF THE BUILDING.
5. LENGTH MAY VARY TO ADJUST ELEVATION OR RUN OF METER SET.

CONSTRUCTION STANDARD
CITY UTILITIES OF
SPRINGFIELD, MISSOURI

5C-TI OR 8C-TI THREADED ROTARY METER SET ON EXISTING FLANGED RISER LP DISTRICT

LATEST REV. DATE	STANDARD NO.	PAGE:
06/12/2019	GS-380C	